Additive Manufacturing Qualification 291

Welcome to the Tooling University. This course is designed to be used in conjunction with the online version of this class. The online version can be found at https://www.toolingu.com. We offer high quality web-based e-learning that focuses on today's industrial manufacturing training needs. We deliver superior training content over the Internet using text, photos, video, audio, and illustrations. Our courses contain "roll-up-your-sleeves" content that offers real-world solutions on subjects such as Metal Cutting, Workholding, Materials, and CNC with much more to follow. Today's businesses face the challenge of maintaining a trained workforce. Companies must locate apprenticeship programs, cover travel and lodging expenses, and disrupt operations to cover training needs. Our web-based training offers low-cost, all-access courses and services to maximize your training initiatives.

© Copyright 2021 Tooling University, LLC. All rights reserved.

Copyright © 2021 Tooling U, LLC. All Rights Reserved.

Class Outline

The Importance of Qualification in Additive Manufacturing
Standards for AM
Standards for AM Qualification
Standardization Challenges for AM Qualification
Review: Standards for AM
Material Qualification
Machine Qualification
AM Process Qualification
AM Part Qualification
Data Collection and Analysis for AM Qualification
Review: AM Qualification

Copyright © 2021 Tooling U, LLC. All Rights Reserved.

Lesson: 1/11

The Importance of Qualification in Additive Manufacturing

The rapidly emerging technologies of additive manufacturing (AM) are gaining recognition due to their many strengths and advantages. Most commonly, manufacturers use AM for rapid prototyping. Rapid prototyping produces prototypes of new designs much faster and with far fewer resources than traditional manufacturing methods. However, as AM technologies evolve, manufacturers are capitalizing on other benefits of AM, particularly its enhanced design capabilities. AM methods can produce parts that are difficult or impossible to produce using traditional methods. Using additive also generally reduces material costs and simplifies supply chains. Many manufacturers seek to leverage the flexibility of additive technologies for more end-use products, and the prospects of lower material costs and simplified supply chains have motivated manufacturers to pursue AM production at a larger scale. However, AM presents a number of quality assurance (QA) challenges for manufacturers. In order to produce end-use parts with AM, organizations must overcome these challenges and adopt or develop robust quality assurance measures for qualifying end-use AM parts.

This material is based upon research supported by, or in part by, the U.S. Office of Naval Research under award number N00014-18-1-2881 led by the National Center for Defense Manufacturing and Machining (NCDMM).

Video content available online.

Copyright © 2021 Tooling U, LLC. All Rights Reserved.

Standards for AM

To help ensure the quality of end-use products, manufacturers rely on standards to qualify a wide range of manufacturing materials, parts, and processes. General manufacturing standards can include certification requirements for machine operators and maintenance personnel, machine temperature limits for certain materials, safety measures, and performance testing requirements for final parts.

Aerospace component manufacturers must often meet the highest quality and safety standards. Aerospace parts have very tight tolerance specifications to ensure proper fit and functionality. Tolerance describes the permissible amount of deviation from a specified dimension. Tight tolerance requirements can limit the use of AM methods for building end-use aerospace parts since many AM machines alone cannot produce parts that meet these tolerances. Additionally, QA strategies for traditional manufacturing processes are often not sufficient for qualifying AM processes. For this reason, some organizations have developed new standards for AM part production.

ASTM International has coordinated with the International Organization for Standardization (ISO) to publish standards defining specific AM processes and terminology, general material selection and processing protocols, and some specific material- and machine-related guidelines. Currently, most AM-specific standards are related to aerospace.

Figure 1: Jet Turbine

Figure 2: Rocket Engines

Copyright © 2021 Tooling U, LLC. All Rights Reserved.

Standards for AM Qualification

Automotive Exhaust Component

Similar to aerospace, automotive parts must meet safety and quality standards. While no current automotive standards focus specifically on additive manufacturing, AM parts and processes must adhere to automotive industry standards, such as IATF 16949:2016. This standard, which replaced ISO/TS 16949, provides guidelines for quality assurance of auto part production, installation, and maintenance. The standard requires manufacturers to show that they can use quality management systems (QMS) to meet customer and regulatory specifications.

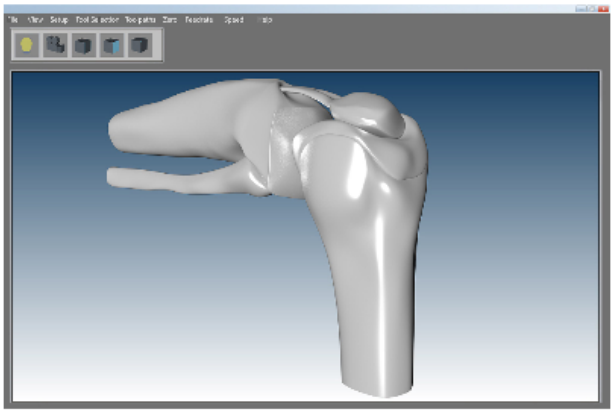

Digital Model of Knee Joint

The medical industry is a primary adopter of AM. AM is commonly used for rapid prototyping and can also be beneficial for various end-use medical products, such as containers, tools, and even surgical implants. By using reverse engineering to create a digital model of a person's limb, AM machines can build customized prosthetics from ceramic, metal, or polymer materials. While these enhanced design capabilities are promising, additional standards are needed to qualify parts for the medical industry due to the dangers of contamination and other safety issues. Currently, standard ASTM F1537-20 specifies QA requirements for a type of metal wire commonly used in surgical implants. Ensuring the integrity of materials helps ensure the mechanical properties of the finished parts. Some directed energy deposition (DED) methods use metal wire and could be used to make these implants. However, the manufacturer would need to ensure the material retains its desired properties according to the ASTM standard after it has gone through the DED process.

Copyright © 2021 Tooling U, LLC. All Rights Reserved.

Defense Pilot Headgear

The defense industry is also adopting AM technology to improve design efficiency, performance, and supply chain management. Defense uses a range of equipment that can be made with AM, including aerospace and automotive components as well as medical equipment, and may adopt quality standards from each respective industry. One U.S. defense standard that applies specifically to AM is MIL_STD 3049. This standard applies to parts repaired using direct metal deposition (DMD), a type of directed energy deposition. The standard provides guidelines for the repair process as well as the inspection and testing of the repaired part.

Copyright © 2021 Tooling U, LLC. All Rights Reserved.

Standardization Challenges for AM Qualification

In addition to following general guidelines established by current standards, manufacturers must develop in-house quality management strategies for qualifying AM operations. Each AM process has unique design and production capabilities that are not addressed in many current standards. Additionally, the wide range of available AM machines and methods make AM processes difficult to standardize. This can create regulatory compliance issues that limit the use of a range of versatile AM technologies to create aerospace or other sensitive components. Because quality goals may not be achievable with some AM processes using traditional manufacturing standards, these processes require new considerations that are not addressed by traditional qualification strategies.

Some standards, like those developed by the American Welding Society (AWS), address general guidelines for all AM processes. The AWS Specification for Fabrication of Metal Components (AWS D20.1/D20.1M:2019) standard presents guidelines for designing, building, and inspecting metal AM parts. However, manufacturers must still develop qualification strategies that are specific to their own operations at each production stage for the wide range of AM processes. Other current standards guide the selection and qualification of materials before they are processed, but AM methods often alter material properties during and after the build process. Some published standards aim to address AM qualification processes for more specific applications, like using DED for part repair and building consistent net-shape parts using laser powder bed fusion (L-PBF) and binder jetting. However, additional standards are needed for these and other AM technologies to qualify a part's material and mechanical properties throughout each build process.

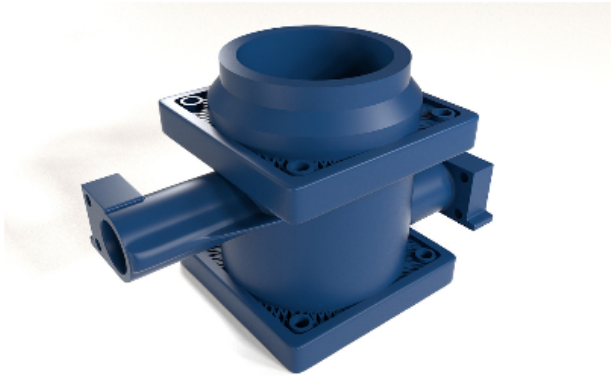

Figure 1: Unique AM parts may require new qualification strategies.

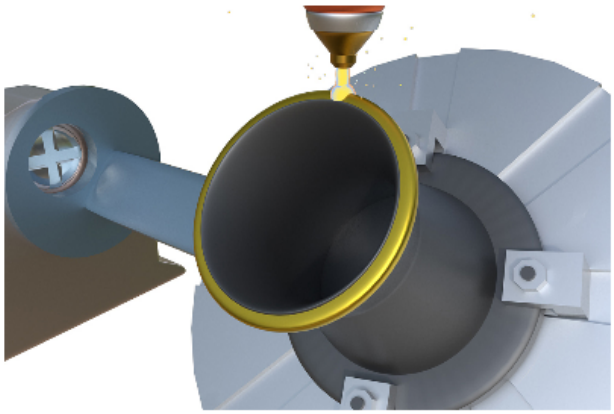

Figure 2: Current standards address DED repair and some other AM processes.

Copyright © 2021 Tooling U, LLC. All Rights Reserved.

Lesson: 5/11

Review: Standards for AM

1. Existing manufacturing standards sufficiently address the uses of AM technology. **FALSE**
2. American Welding Society (AWS) standards provide general guidelines for building and inspection processes for AM. **TRUE**
3. ISO and ASTM create standards for AM that often contradict one another. **FALSE**
4. Most existing AM-specific standards apply directly to aerospace manufacturing. **TRUE**

Copyright © 2021 Tooling U, LLC. All Rights Reserved.

Material Qualification

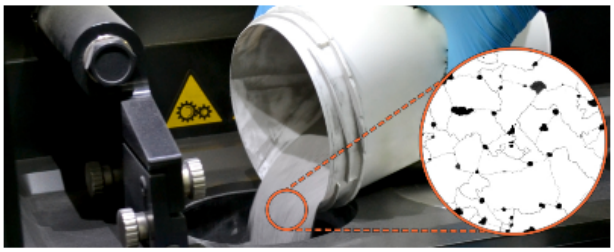

The National Aeronautics and Space Administration selects raw materials for aerospace components based on the useful life specification. This means selecting only those materials that can withstand expected operating temperatures, loads, and other conditions for the intended lifecycle of the part. Another standard, ASTM F2924-14 suggests that different powders may require different testing methods based on material type, particle size, and other factors. Other material standards include the Aerospace Material Specifications (AMS) developed by SAE International. Standard SAE AMS 7002-2018 covers general processing guidelines for metal powder feedstock for AM, while SAE AMS 7001-2018 provides guidelines for a specific nickel-alloy powder that is resistant to corrosion and high temperatures.

Though it is important to qualify raw materials selected for AM processes, manufacturers must also be able to qualify parts built using AM. Many AM build processes can alter the properties of build materials, which can affect the intended mechanical properties of finished parts. Metals and polymers especially undergo various material changes during the heating and cooling phases of high-temperature AM processes. Each material has a different glass transition temperature and melting point, and manufacturers must develop systems to verify material integrity is maintained consistently during and after different build processes. Metallurgy can often be used to determine material properties and integrity by examining the microstructure of materials at different stages of the build process.

Copyright © 2021 Tooling U, LLC. All Rights Reserved.

Machine Qualification

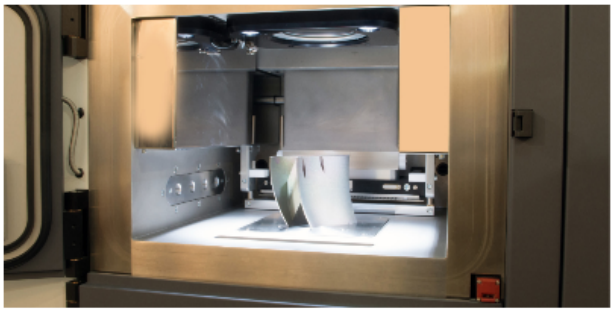

When using any AM processes for end-use parts, manufacturers must adopt measures to increase repeatability and reduce variation to acceptable levels based on production standards. Repeatability can be difficult to achieve with AM machines. Machines may produce different results depending on temperature settings and material type, as well as layer width and other adjustable variables. In order to help achieve repeatability, machine operators must fine-tune variables such as layer width and other settings. Design engineers and machine operators must collaborate and use troubleshooting skills to achieve desired results by performing repeated experiments. This process must be optimized until an acceptable level of repeatability is achieved. Specifying machine settings based on optimized build parameters reduces or eliminates the need for repeated experiments, streamlines training of new technicians, and increases productivity.

In addition to machine settings and operating procedures, AM machine maintenance procedures must also be standardized. Maintenance technicians should be certified according to relevant industry standards or in-house standards when no concrete standard exists.

Copyright © 2021 Tooling U, LLC. All Rights Reserved.

AM Process Qualification

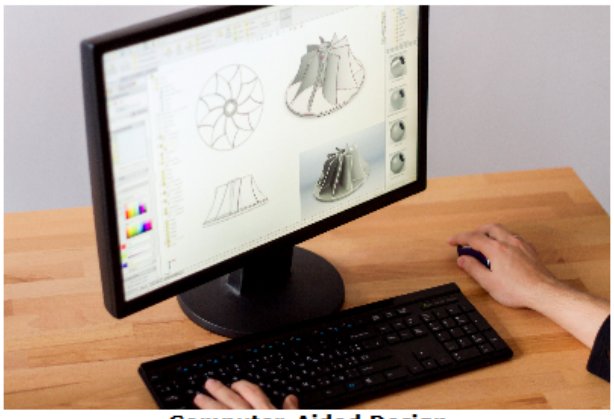

Computer-Aided Design

In the designing phase, design engineers create digital part models using computer-aided design (CAD) software. A standardized CAD process for each AM method helps improve quality assurance. CAD software has settings for specific AM machine types, many of which must be adjusted based on part specifications, so design engineers and technicians should understand the capabilities and limitations of each machine that will produce a final part. Some advanced CAD software has additional functionality, like complex algorithms for topology optimization and generative design. Other more basic CAD tools, like free downloadable software packages, may not be sufficient for complex, end-use part production. Manufacturers should determine software functionality requirements based on quality standards for each part.

Unique AM parts may require nonstandard workholding devices.

Standardizing workholding and machine setup processes for AM is also a challenge. The complex part geometry that some AM methods can produce is not always supported by traditional workholding devices. Though AM build processes do not require workholding, the complex shapes created with AM can hinder or prevent traditional hardness testing and post-processing methods without specialized workholding devices. Manufacturers may need to adopt nonstandard custom workholding methods, such as using adhesives or customized grippers, for uniquely shaped components.

Copyright © 2021 Tooling U, LLC. All Rights Reserved.

Binder Jetting, Courtesy of ExOne

Build processes for different machines should also be standardized. Most current standards for AM machine qualification cover L-PBF machines. For example, ISO/ASTM 52941:2020 establishes specific tests necessary to qualify L-PBF machines for metal parts before they can be used for production. SAE International has published standards for L-PBF and binder jetting, a similar method that uses raw material powder and a binder material. Standard SAE AMS 7003-2018 addresses L-PBF process controls. SAE AMS 7022 outlines process guidelines for building metal or ceramic aerospace parts with binder jetting. Additional standards must be developed to help qualify a broader range of specific AM processes and applications.

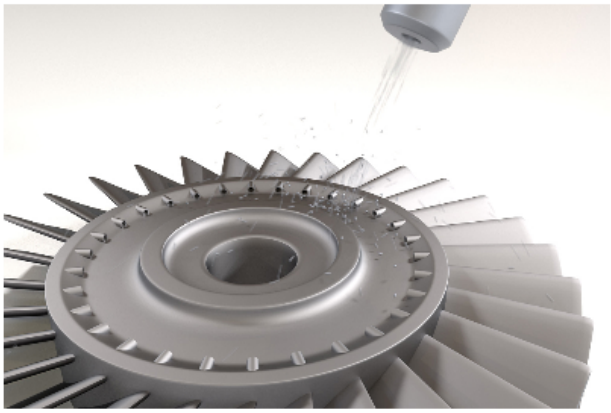

Shot Peening

All AM parts require post-processing. AM parts may need curing or heat treatment to prevent thermal damage, shot peening to improve surface strength, or other methods depending on the material, process, and operating conditions. Manufacturers should determine standards for how each part should be heat treated, proper materials for infiltration, and other details for different parts and processes.

Copyright © 2021 Tooling U, LLC. All Rights Reserved.

Lesson: 9/11

AM Part Qualification

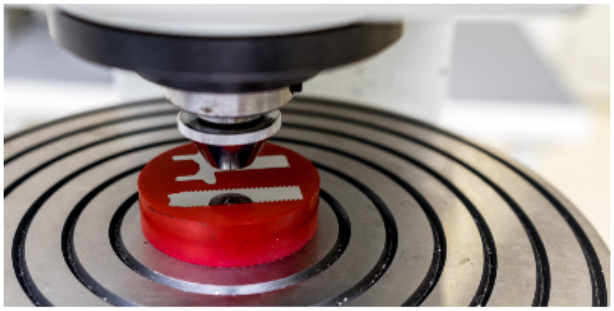

Operators and technicians must perform tests and measurements after post-processing to ensure that a final part meets design specifications and performance requirements. Manufacturers must develop strategies to test and qualify part quality throughout the build process. For example, using test coupons to check a part after each step of the build can help manufacturers greatly reduce variation in final parts. Engineers and technicians must fine-tune unstandardized processes to produce a quality part. AM end-use parts, especially safety devices and other critical components, should meet the same safety and quality standards as parts made with traditional methods. Many tests for traditionally manufactured parts, such as the Rockwell hardness test, can be performed on AM test coupons and final parts. After standardizing an AM production process, manufacturers can also use nondestructive testing (NDT) methods, such as radiographic testing (RT) or ultrasonic testing (UT), to qualify parts before distributing them for end-use.

Copyright © 2021 Tooling U, LLC. All Rights Reserved.

Data Collection and Analysis for AM Qualification

Manufacturers using AM must accurately collect and store data, such as preferred machine settings, to qualify specific applications. Data collection provides advantages such as the digital thread for product lifecycle monitoring, predictive maintenance, and design optimization for future product iterations. The digital thread offers a number of benefits for material quality assurance and machine, process, and part qualification. Creating internal sensors in AM parts to record and analyze usage data can also help improve design for future iterations of the part.

Collecting and leveraging data also enables manufacturers to automate processes using machine learning (ML) and artificial intelligence (AI). Automation can greatly improve quality by increasing the efficiency of inspection, maintenance, and other processes. Machine learning and AI also enhance design software, enabling capabilities like topology optimization and generative design.

Most manufacturing processes in smart manufacturing, including AM, rely on the Industrial Internet of Things (IIoT). The IIoT includes a range of smart technology devices, such as sensors for data collection, cameras and scanning devices for reverse engineering, connected AM machines for streamlined production, and local and cloud computing devices for data storage. When connecting AM machines to the IIoT, manufacturers must protect proprietary and confidential information such as designs and specialized materials. Additionally, since most machines communicate digitally with other devices, manufacturers must be cautious of malware and other cyber threats that could affect machine operation. All IIoT devices are susceptible to malware and other types of cyber attacks, which can completely stop production or even create safety hazards.

Figure 1: Generative Design Software

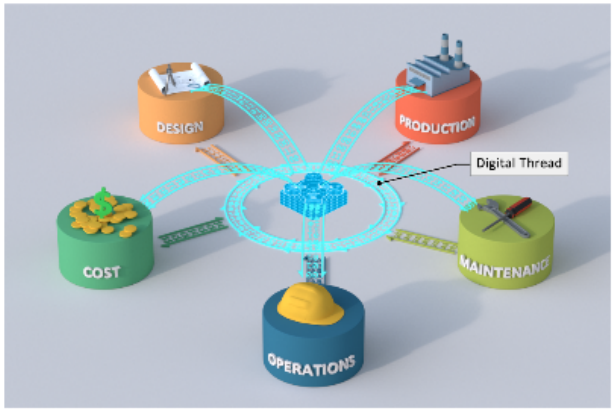

Figure 2: Digital Thread

Copyright © 2021 Tooling U, LLC. All Rights Reserved.

Lesson: 11/11

Review: AM Qualification

- **Metallurgy**: Used to analyze the microstructure of components to determine material properties.
- **Advanced CAD Software**: Technology that can utilize generative design and topology optimization tools.
- **Workholding**: A challenge in AM production due to uniquely shaped build components.
- **Laser Powder Bed Fusion**: The type of additive manufacturing with the most current published AM process standards.
- **Digital Thread**: Used to improve predictive maintenance and optimize production.

Copyright © 2021 Tooling U, LLC. All Rights Reserved.

Class Vocabulary

Additive Manufacturing	AM. The process of joining or solidifying materials to make an object from a three-dimensional computer model. Additive manufacturing methods typically build up layers of material to create an object.
Adhesives	A non-metallic substance used to bond two or more materials together. Adhesives are sometimes used as workholding for non-metallic, delicate, and irregularly shaped workpieces.
Aerospace Material Specifications	AMS. A group of standards developed by the Society of Automotive Engineers (SAE) that govern material requirements for aerospace equipment. SAE Aerospace Material Specifications cover the selection and processing of a variety of materials to ensure material quality.
AM	Additive manufacturing. The process of joining or solidifying materials to make an object from a three-dimensional computer model. AM methods typically build up layers of material to create an object.
American Welding Society	AWS. A professional organization that supports the welding industry and promotes welding and related processes. The American Welding Society provides industry-standard codes and certification procedures.
Artificial Intelligence	AI. A computer program with algorithms that function as behavioral rules, allowing a machine or computer to imitate intelligent human behavior. Artificial intelligence allows machines to perform a process with autonomy.
ASTM F1537-20	A standard developed by the American Society for Testing and Materials that covers required properties for wrought Cobalt-28 Chromium-6 Molybdenum alloys used for surgical implants. ASTM F1537-20 defines material and mechanical properties for investment castings and well as part stock for implants made from this alloy.
ASTM F2924-14	A standard developed by the American Society for Testing and Materials (ASTM) that covers the production of components using titanium-6aluminum-4vanadium (Ti-6Al-4V) with laser powder bed fusion (L-PBF). ASTM F2924-14 specifies properties of materials as well as guidelines for components used to produce parts made of Ti-6Al-4V with L-PBF.
ASTM International	An organization that writes and updates standards for a broad range of materials, including metals. ASTM International, formerly the American Society for Testing and Materials, has created seven classifications for additive manufacturing (AM) processes.
Automation	The automatic control of equipment, processes, or systems. Automation is an efficient means of performing manufacturing processes.
Binder Jetting	An additive manufacturing (AM) method in which liquid binder is used to join powdered materials to create parts. Binder jetting can create parts out of metal, polymer, or ceramic.
Build Materials	The substance used to create an additively manufactured part. Build material includes metals, polymers, composites, and ceramics.
Build Parameters	An adjustable variable that controls an aspect of an additive manufacturing process. Build parameters for powder AM machines include temperature settings, layer thickness, printing speeds, and other details.
Ceramic	A hard, brittle material that can withstand high temperatures and resist corrosion. Ceramic parts can be created through additive manufacturing (AM) processes such as binder jetting and selective laser sintering (SLS).
Certification	Validation that a person or company has achieved a certain standard. Certification may be awarded by a school, a professional organization, or another governing body.
Cloud Computing	A combination of hardware and software computing technology typically provided by a third party that allows clients to access, store, and process data remotely through an

Copyright © 2021 Tooling U, LLC. All Rights Reserved.

internet connection. Servers used in cloud computing can provide multiple clients with access to unlimited storage and processing capabilities but may pose greater cybersecurity risks than secure local area network servers (LANs).

Computer-Aided Design CAD. A method of designing two- and three-dimensional objects using computers and software. Computer-aided design is most often used to create part models for production.

Contamination The presence of any unwanted substances in a product. Contamination can reduce the effectiveness of medical equipment and cause health issues for patients.

Curing The process of hardening a material through exposure to heat or another hardening agent, such as ultraviolet (UV) light. Curing is used to harden brittle additively manufactured parts created using powder-based methods and parts made from liquid photopolymer.

DED Directed energy deposition. An additive manufacturing process in which focused thermal energy is used to melt materials as they are deposited. DED is often used with powdered or wire metal feedstock.

Design For Additive Manufacturing DFAM. The methodology of planning, testing, and creating an additively manufactured part that functions optimally. Design for additive manufacturing allows engineers to mostly focus on part functionality.

Digital Thread An integrated view of all the data and information about a machine or process throughout its lifecycle. The digital thread connects information from all aspects of a product into one seamless network.

Dimensions A measurement of space, especially length, width, and height. Dimensions of a part are detailed in a blueprint or CAD model.

Direct Metal Deposition DMD. A directed energy deposition (DED) process that uses a laser or plasma arc to melt build materials as they are deposited on a build platform. Direct metal deposition most frequently uses metal powders as build materials.

Directed Energy Deposition DED. An additive manufacturing process in which focused thermal energy is used to melt materials as they are deposited. Directed energy deposition is often used with powdered or wire metal feedstock.

End-Use Designed to be used directly by a consumer or directly in another manufactured product. End-use products created by additive manufacturing (AM) include medical implants, custom dental devices, and camera equipment.

Generative Design An advanced type of computer-aided design (CAD) that uses cloud computing and artificial intelligence to produce alternative designs of components. Generative design software can allow engineers to innovate designs much faster than traditional CAD software.

Glass Transition Temperature The temperature at which a rigid solid becomes pliable and can be formed, shaped, or molded. The glass transition temperature is slightly below the melting point.

Grippers A mechanical device on a robot that uses rotary and linear actuators to mimic the motion of the human hand. Grippers have complex shapes that can be easily produced using additive manufacturing.

Heat Treatment A controlled heating and cooling process used to change a material's structure and alter its physical and mechanical properties. Heat treatment often alters a material's hardness.

IATF 16949:2016 A revised version of standard ISO/TS 16949 developed by the International Automotive Task Force (IATF) to improve international standards in the automotive industry. IATF 16949:2016 includes additional input from a range of organizations in the automotive industry and throughout the automotive supply chain.

Industrial Internet Of Things IIoT. A network of smart industrial machines and devices. The Industrial Internet of Things is the manufacturing-specific part of the overall Internet of Things (IoT).

Infiltration The process of a substance entering a porous material in order to fill any empty spaces or voids. Infiltration is a specialized post-processing step that is sometimes used to harden and strengthen parts produced by additive manufacturing.

Internal Sensors A type of sensor that is located inside a machine or other device. Internal sensors inside a part can provide feedback about the state of the part.

Copyright © 2021 Tooling U, LLC. All Rights Reserved.

International Organization For Standardization	ISO. A nongovernmental organization based in Switzerland that develops and establishes standards, rules, and guidelines designed to ensure that products, processes, and services are fit for their purposes. The International Organization for Standardization publishes standards for a broad range of industries.
ISO/ASTM 52941:2020	A standard developed by ASTM International and published by the International Organization for Standardization (ISO) for laser powder bed fusion (L-PBF) machines. ISO/ASTM 52941:2020 covers test and inspection methods for qualifying L-PBF machines for aerospace part production.
ISO/TS 16949	An automotive supply chain standard developed by the International Automotive Task Force (IATF). ISO/TS 16949 was intended to improve and standardize international automotive supply chain certification and was eventually revised as IATF 16949:2016.
Laser Powder Bed Fusion	L-PBF. An additive manufacturing (AM) method that uses a laser to fuse or melt together layers of powdered polymer, metal, ceramic, or other material. Laser powder bed fusion processes include selective laser sintering (SLS) and selective laser melting (SLM).
Layer Width	A measurement of the amount of material applied to a layer horizontally in one pass of an additive manufacturing (AM) process. Layer width helps determine build rate, though too high a layer width can lead to thermal distortion.
Lifecycle	The series of stages a product goes through from conception to the end of its useful life. The lifecycle includes design, production, distribution, and operation stages.
L-PBF	Laser powder bed fusion. An additive manufacturing (AM) method that uses a laser to fuse or melt together layers of powdered polymer, metal, ceramic, or other material. L-PBF processes include selective laser sintering (SLS) and selective laser melting (SLM).
Machine Learning	ML. The process that enables a digital system to analyze data in order to build predictive models. Machine learning systematically solves problems using highly complex algorithms.
Maintenance	The necessary and basic support and repair of machines that involves tasks such as lubricating, adjusting, and replacing machine parts. Maintenance helps to reduce machine breakdowns and ensure user safety.
Malware	Any malicious code or software that can potentially harm a computer, device, or network, or retrieve data from the network or device without authorization. Malware often exists undetected on systems for extended periods of time.
Mechanical Properties	A characteristic that describes how a material reacts when subjected to a force that attempts to stretch, compress, bend, dent, scratch, or break it. Mechanical properties include strength, toughness, ductility, and hardness.
Melting Point	The temperature at which a material changes from a solid to a liquid. Melting points can be very low, like in some polymers, or very high, like in ceramics.
Metallurgy	The technique or science of separating metals from their ores, creating alloys, and altering their properties. Metallurgy is important for optimizing metal part production using additive manufacturing (AM) technology.
Microstructure	The shape and alignment of microscopic components in a material. Microstructure helps determine the properties of a material.
MIL_STD 3049	A standard developed by the Department of Defense (DOD) that specifies guidelines for the restoration of components using direct metal deposition (DMD). MIL_STD 3049 covers material selection, inspection, and other guidelines for DMD repair.
National Aeronautics And Space Administration	NASA. A civil government organization concerned with the national space program, aeronautics, and related research. The National Aeronautics and Space Administration is the largest civil consumer of U.S. aerospace products.
Net-Shape	A part that meets consumer or manufacturer specifications, including tolerance and surface finish requirements, directly after it is manufactured. Net shape parts do not need any further post processing after they are created.
Nondestructive Testing	NDT. A category of inspection processes that evaluate a part's properties and performance using methods that do not damage or permanently alter the part. Nondestructive testing methods include visual testing, liquid penetrant testing, magnetic particle testing, eddy current testing, ultrasonic testing, and radiographic

Copyright © 2021 Tooling U, LLC. All Rights Reserved.

magnetic particle testing, eddy current testing, ultrasonic testing, and radiographic testing.

Polymer A natural or synthetic material that consists of very large molecules held together by either a secondary bond or a primary bond. Polymers include silk, nylon, rayon, and plastics.

Post-Processing A finishing process used to clean, grind, or otherwise prepare an additive manufacturing (AM) part for use by a manufacturer or other consumer. Common AM post-processing steps include removing support structures, heat treating, improving surface finish, and bringing the part into tolerance.

Predictive Maintenance A maintenance approach that involves testing and monitoring machines to predict machine failures by using equipment such as sensors and other devices. In predictive maintenance, periodic readings are compared to baseline readings in order to identify problems.

Properties A physical or mechanical characteristic of a material that distinguishes it from other materials. Properties determine how a material will perform in different environments.

Proprietary Designed by a specific company for use only with its own systems. Proprietary materials include many polymers and superalloys that have been designed for specific applications.

Prosthetics An artificial implant, device, or limb that replaces a missing body part. Prosthetics may also refer to the design, fabrication, and fitting process involved with these devices.

QA Quality assurance. The overall effort by a manufacturer to ensure all parts and products meet consumer or regulatory standards. QA is a challenge for additive manufacturing (AM) operations because the part build process can be highly var

Quality Assurance QA. The overall effort by a manufacturer to ensure all parts and products meet consumer or regulatory standards. Quality assurance is a challenge for additive manufacturing (AM) operations because the part build process can be highly variable.

Quality Management Systems QMS. The objectives and processes of a company that work together to focus the company toward quality and customer satisfaction. A quality management system consists of written documents that outline the necessary activities and procedures.

Radiographic Testing RT. A nondestructive testing method that uses electromagnetic radiation, in the form of x-rays or gamma rays, to produce a picture of the internal structure of a material. Radiographic testing images display discontinuities and defects in a material as dark spots.

Rapid Prototyping A product development technique that uses additive manufacturing (AM) methods to create a part model. Rapid prototyping allows manufacturers to quickly create functional part models in a short time period, reducing lead time.

Raw Materials An unprocessed or lightly processed substance, often referred to as feedstock, that is used in additive manufacturing (AM) machines to build parts or components. Raw materials for AM commonly come in powder, pellet, wire, or semi-liquid form.

Regulatory Compliance When a business follows state, federal, and international laws and regulations relevant to its operations. Regulatory compliance varies by industry.

Repeatability The ability of a machine or process to continually deliver accurate and precise results. Repeatability measures how consistently a machine can replicate identical or near-identical parts.

Reverse Engineering A process that allows a person to capture three-dimensional geometric data about an existing object and convert that into a CAD design. Reverse engineering is being increasingly used among AM manufacturers.

Rockwell Hardness Test A hardness test that measures the degree of penetration into a material caused by a cone-shaped or ball indenter that is applied under a fixed load. A Rockwell hardness test applies two static loads to the material during the test.

SAE AMS 7001-2018 A standard developed by the Society of Automotive Engineers (SAE) covering the processing of a specific type of nickel alloy powder for use in additive manufacturing (AM). SAE AMS 7001-2018 helps ensure the nickel-alloy powder has high corrosion and heat resistance properties.

SAE AMS 7002-2018 A standard developed by the Society of Automotive Engineers (SAE) covering

Copyright © 2021 Tooling U, LLC. All Rights Reserved.

processing requirements for metal powder used in additive manufacturing (AM) for aerospace parts. SAE AMS 7002-2018 specifies general guidelines for all metal powders used in AM.

SAE AMS 7003-2018 A standard developed by SAE International that specifies part production using laser powder bed fusion (L-PBF). SAE AMS 7003-2018 provides guidelines for machine controls to produce repeatable, accurate results with L-PBF.

SAE AMS 7022 A standard developed by SAE International that specifies part production using binder jetting. SAE AMS 7022 provides guidelines for machine controls to produce repeatable, accurate results with binder jetting.

SAE International An organization of engineers that sets most industry standards for the testing, measuring, and designing of automobiles and their components. SAE International was formerly called the Society of Automotive Engineers.

Safety Standards A practice or policy that a company puts in place in order to preserve the health and well-being of employees, equipment, and facilities. Safety standards for aerospace parts may be difficult or impossible to meet using additive manufacturing (AM) processes.

Sensors A device that detects a change in a physical stimulus and turns it into a signal that can be measured or recorded. Sensors may be connected to a machine or system in order to collect operational data that is later analyzed.

Shot Peening A finishing method that uses a propelled stream of round shot beads to cold work metal surfaces. Shot peening corrects minor surface defects and strengthens the material.

Smart Manufacturing Technologically integrated manufacturing that creates and uses data in real time to improve manufacturing efficiency. Smart manufacturing is an enhancement of traditional manufacturing automation.

Standards An established policy regarding specific product requirements or a particular practice or method. Standards cover a range of topics, from the required properties of a material to the documentation necessary across the supply chain.

Supply Chain Management The process of planning, implementing, and controlling supply chain activities to achieve maximum customer value and sustain competitive advantage. Supply chain management oversees each organization in the supply chain, from development and sourcing to production and delivery.

Surface Finish The degree of roughness and variation on the surface of a part after it has been manufactured. Initial surface finish quality varies depending on the additive manufacturing (AM) process used and the build parameters.

Surgical Implants A device installed on the surface or inside of a human body, usually through surgery. Implants perform essential functions such as monitoring body functions and supporting nearby organs and bodily structures.

Test Coupons A sample part or piece of material for the purpose of testing and inspection. Test coupons have exactly the same variables as outlined in the part specification.

Tolerance An unwanted but acceptable deviation between an actual part dimension and its intended design. Tolerances are assessed during the inspection stage of manufacturing.

Topology Optimization The arrangement of geometric or material components in a part in a way that uses materials most efficiently. Topology optimization software uses algorithms to determine the least amount of material that can be used in specific areas of a part without compromising part functionality.

Traditional Manufacturing The process of creating a part by shaping or removing material from a workpiece. Traditional manufacturing operations include metal cutting and forming.

Troubleshooting A systematic, standardized approach to solving problems quickly and efficiently. Troubleshooting focuses on identifying the root cause of a problem and eliminating that cause to create a permanent solution.

Ultrasonic Testing UT. A nondestructive testing method that uses high-frequency ultrasonic waves to detect internal part discontinuities and defects. During ultrasonic testing, reflected sound waves are converted into electrical signals, which technicians then evaluate.

Copyright © 2021 Tooling U, LLC. All Rights Reserved.

Useful Life A designation in NASA standard NASA-STD-6016A that describes the performance requirements for the lifecycle of a specific product. Useful life guidelines determine material selection for critical-use parts.

Variation Any difference that exists between two or more related things. Variation is an unavoidable occurrence.

Workholding A method or device for securing a workpiece for a machining operation. Workholding can include chucks, vises, and bolts.

Copyright © 2021 Tooling U, LLC. All Rights Reserved.